卷册检索号 SEARCH NO. OF THE VOLUME
MLHVDC-LCS-ECI-DD-HA-0212 30-B003701S-N0212

第 1 页 PAGE　共 1 页 OF

图纸文件目录（首页）

CATALOG OF DRAWING DOCUMENTS (HEAD PAGE)

拉合尔±660kV换流站 工程 施工图 阶段
±660kV Lahore Converter Station PROJECT Detail Design DESIGN STAGE

暖通 专业 第 02 卷 第 12 册
HVAC SPECIALITY VOLUME BOOK

卷册名称 深井泵房通风
Volume name Deep well HV Drawing

批　准 APPROVED BY	
审　核 REVIEWED BY	
设计/勘测 DESIGNED BY/ SURVEYED BY	吕笑宇
图纸 2 张 DRAWING NOS.	打印件 0 本 PRINTED COPIES NOS.

序号 No.	图　号 DRAWING NO.	文件名称 DOCUMENT TITLE	版本 EDITION	张 NOS.	本 NOS.	备注 REMARKS
1	30-B003701S-N0212-001	深井泵房通风和空调工程设计及施工说明 Ventilation and Air-Conditioning Project Design & Construction Specifications	A	1		
2	30-B003701S-N0212-002	深井泵房通风平面图 Deep well Ventilation plan	A	1		

注:

通风和空调工程设计说明

Ventilation and Air-Conditioning Project Design Specifications

一、 工程概况

Ⅰ. Project Overview

1. 项目名称：巴基斯坦默蒂亚里－拉合尔±660kV直流输电工程/拉合尔±660kV换流站

Project name：±660kV HVDC Project from Matiari to Lahore in Pakistan

2. 建设单位：国家电网/中国电力技术装备有限公司

Development organization：State Grid / China Electric Power Equipment And Technology CO .TD

3. 设计范围：建筑区1栋单体

Design scope: Infrastructure Area / about 1 building

4. 单体概况：

单体名称	建筑层数	建筑高度 m	建筑面积 m^2	室内外高差 m	建筑分类	耐火等级
深井泵房	1	6.00	22.12	0.3	戊类	二级

结构形式：框架　　结构使用年限：50年

抗震设防烈度：7度半　　防水层使用年限：15年

Building Overview:

Name	Building Storey	Height m	Area m^2	Altitude intercept m	Building classification	fire resistance rating
Deep well	1	6.00	22.12	0.3	class E	second level

Structural style: frame structure　　Service life of structure: 50 years

Earthquake fortification intensity: 7degree and a half　　Life of waterproof layer: 15 years

二、 室内外设计参数

Ⅱ. Indoor and outdoor design parameters

1. 室外气象参数

Outdoor meteorological parameter

夏季室外计算干球温度：　43.2℃

Summer outside dry-bulb temperature:

夏季室外计算湿球温度：　23.2℃

Summer outside wet-bulb temperature:

供暖室外计算温度：　3.9℃

Heating outdoor temperature:

极端最高气温：　48.0℃（2007.6.10）

Extreme maximum temperature:

极端最低气温：　−2.2℃（2008.1.22）

Extremely minimum temperature:

年平均气压：　983.1hPa

Annual mean atmospheric pressure:

年平均相对湿度：　57%

Annual mean relative humidity:

年平均风速：　1.6m/s

Annual mean air speed:

主导风向：　NW

Prevailing wind direction:

2. 通风标准

Ventilation standard

参数 Parameter / 房间名称 Room name	换气次数 Air change rate 次/时 Times/Hour
深井泵房 Deep well	≥ 6

三、通风系统

Ⅲ. Ventilation system

深井泵房设置机械通风系统，以去除室内异味。

Mechanical ventilation system is set up in the deep well，to remove indoor odors.

通风和空调工程施工说明

Ventilation and Air-Conditioning Project Construction Specifications

一、 一般规定

Ⅰ. General regulations

1. 空调通风工程的施工验收应本说明进行，说明中未详之处均应遵照国家标准执行，执行规范如下：

The construction acceptance of air-conditioning and ventilation project shall be performed in accordance with the Specifica-tions. Any detail not described in the Specifications shall adhere to national standards. The codes to be applied are shown as follow:

A.《通风和空调工程施工质量验收规范》　GB 50243−2016

Code for Acceptance of Construction Quality of Ventilation and Air Conditioning Works

B.《通风与空调工程施工规范》　GB 50738−2011

Code for Construction of Ventilation and Air Conditioning Works

C.《机械设备安装工程施工及验收通用规范》　GB 50231−2009

General Code for Construction and Acceptance of Mechanical Equipment Installation Engineering

D.《通风管道技术规程》　JGJ 141−2004

Technical Procedure of Air Duct

2. 图中的尺寸单位：

Unit of dimensions in drawings

标高以米计；其余尺寸以毫米计。

Elevation is indicated in meter; the rest dimensions are indicated in millimeter.

二、风道：

Ⅱ. Ducts

1. 管材、制作、安装：

Piping，fabrication and installation

排风管采用镀锌钢板制作，风管配件、厚度和允许漏风量等均应符合规范A低压系统风管的规定，同时应符合规范 A/B风管的规定。

Exhaust ducts are made of galvanized steel plates, and the fittings, thickness and allowable air leakage of ducts shall conf-orm to the regulations on low-pressure system ducts in the code A; at the same time, the regulations on ducts in the codes A/B shall be conformed to.

2. 风管上的部件（防火阀、消声器等）安装时，气流方向应正确、设有单独的支吊架，保证阀板转动灵活，连接风管不变形，阀柄操作方便，保温层应不影响阀杆和阀柄的运动。

When components (such as fire-resistant valves, silencers and etc.) on ducts are mounted, the air flow direction shall be correct, separate supports and hangers shall be set up, free rotation of valve plates shall be ensured, connecting air ducts shall not be deformed, valve handles shall be easy to operate and thermal insulating layers shall have no effect on the movement of valve levers and valve handles.

3. 一般风管的法兰之间可采用厚3~5mm的闭孔海绵橡胶板作密封垫圈；防火阀、排烟风管的法兰垫圈采用防火膨胀圈。

Between the flanges of general air ducts, 3-5mm thick closed-cell foam rubber plates can be used as sealing gaskets; fire-proof expansion rings are used as the flange gaskets of fire-resistant valves and smoke exhaust ducts.

三、油漆：

Ⅲ. Painting：

1. 管道在试压、清洗合格后方能进行除锈和油漆工作。

Only after pipes are accepted in their pressure test and cleaning, rust removal and painting work can be performed.

2. 所有非镀锌铁件均须除锈后刷防锈漆两度；非保温者再刷面漆两度。

All non-galvanized iron pieces must be painted in two passes with anti-rust paint after rust removal; the pieces which are not thermally insulated shall be additionally painted in two passes with finishing paint.

3. 非镀锌支、吊架、法兰应在安装前完成除锈、刷漆工作。

Before installation, rust removal and painting work for non-galvanized supports, hangers and flanges shall be completed.

4. 风管角钢法兰先进行两度防锈底漆处理后方可铆接到风管上。

Angle iron flanges of ducts can be riveted onto ducts only after anti-rust primer treatment is performed on them in two passes at first.

5. 管道最外层显眼处应涂识别色或识别环，识别环宽度应不小于50mm，最大间隔为6m。

An obvious position in the outermost layer of pipes shall be painted in identification color or identification rings. The width of identification rings shall not be less than 50mm and the maximum spacing between them shall be 6m.

四、安装参考图集

Ⅳ. References for installation

1. 风机安装参见国标K101−1~3（通风机安装）。

Fan installation see gb K101−1 ~ 3 (fan installation).

2. 风管制作安装参见国标07K133，支吊架制作安装参见国家标准08K132。

For the installation of air duct, see the national standard 07K133, and the installation of a hanger is in the national standard 08K132.

五、设备安装

Ⅴ. Installation of equipment

1. 设备安装前应按设计要求检验其型号、规格，应有产品合格证和安装使用说明书，核对无误时方能进行安装。

Before the installation of equipment, its model number and specifications shall be checked in accordance with design requi-rements. The installation can be performed only when the conformity certificate and installation and operation instructions of product are present and they are checked for no error.

安装应按说明书要求进行或由供货商提供指导，吊装时应安全、稳妥，受力点不得使设备产生部由变形或损伤。

The installation shall be performed in accordance with the requirements in the instructions or it shall be performed with the directions provided by the supplier. Lifting shall be carried out safely and properly. Force-bearing points shall not lead to the occurrence of distortion, deformation or damage to the equipment.

2. 所有设备安装用的预埋件、预留洞等应与土建施工单位密切配合，避免遗漏和返工。

For the pre-embedded pieces and preformed holes used for the installation of all equipment, the close cooperation with civil work construction unit shall be made to avoid omissions and reworking.

Reference Drawings

Drwg. No.	Title

Revisions

	Name	Date	Notes

巴基斯坦默蒂亚里—拉合尔±660kV直流输电工程

±660kV HVDC Project from Matiari to Lahore in Pakistan

NATIONAL TRANSMISSION & DESPATCH COMPANY (NTDC) LIMITED PAKISTAN

CONTRACTOR　国家电网 STATE GRID　中国电力技术装备有限公司 CHINA ELECTRIC POWER EQUIPMENT AND TECHNOLOGY CO.,LTD.

SUBCONTRACTOR　East China Electric Power Design Institute Co.,Ltd.

拉合尔±660kV换流站

±660kV Lahore Converter Station

设计阶段 PHASE：施工图 Detail Design

MLHVDC-LCS-ECI-DD-HA-0212-001A

	姓名 Name	日期 Date
设计 Designed	张俊勇	
校核 Checked	王新林	
审核 Reviewed	李加坤	
批准 Approved	李加坤	

深井泵房通风和空调工程设计及施工说明

Ventilation and Air-Conditioning Project Design & Construction Specifications

比例 Scale：　图号 DWG NO.：30-B003701S-N0212-001　版本 REV.：A

594X841

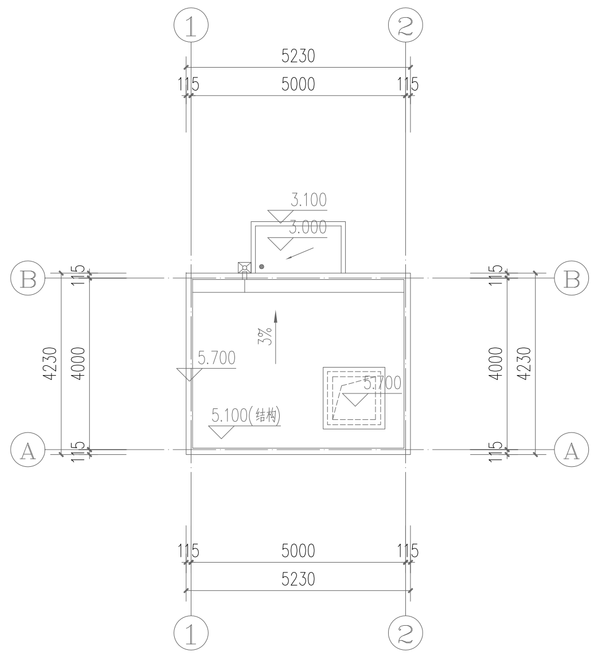

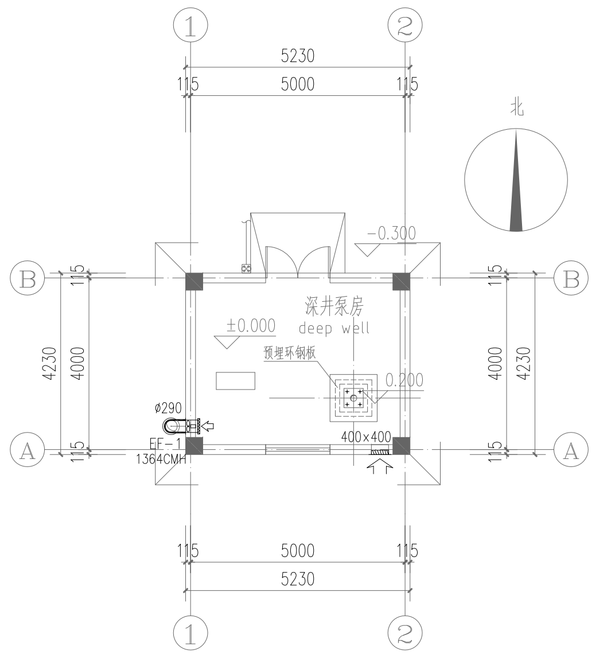

备注： Note:

1. 风机、风管均贴梁底敷设；
   The axial fan and air duct are all laid on the bottom of the beam.
2. 设计说明见图纸 B003701S-N0212-001。
   The design description is shown in the drawing B003701S-N0212-001.

配件表：Parts Preferences：

不锈钢防雨罩	stainless steel shield	Ø290	个 amount	1
镀锌钢板	galvanized steel sheet	δ=0.6mm	平方米 m²	2
不锈钢丝网	stainless steel wire	Ø1x10x10	平方米 m²	0.2
防雨百叶	rainproof louver	400×400	个 amount	1

风机性能表：Draught fan Preferences:

设备编号 serial number	服务区域 service area	风机形式 device form	参考型号 mode	驱动形式 Drive form	风量 flow m³/h	全压/静压 Total/Static pressure Pa	电机功率 power kW	电源 electrical source Ø-V-Hz	应急电源 emergency electricity	减振方式 vibration isolation	台数 amount	备注 note
EF-1	深井泵房 deep well	轴流风机 axial fan	T35-11-2.8	直接传动 Direct drive	1364	45	0.025	3-380-50	--	S	1	

Reference Drawings

Drwg. No.	Title

Revisions

	Name	Date	Notes

巴基斯坦默蒂亚里—拉合尔±660kV直流输电工程
±660kV HVDC Project from Matiari to Lahore in Pakistan

NATIONAL TRANSMISSION & DESPATCH COMPANY (NTDC) LIMITED PAKISTAN

CONTRACTOR 国家电网 STATE GRID 中国电力技术装备有限公司 CHINA ELECTRIC POWER EQUIPMENT AND TECHNOLOGY CO.,LTD.

SUBCONTRACTOR East China Electric Power Design Institute Co.,Ltd.

拉合尔±660kV换流站
±660kV Lahore Converter Station

设计阶段 PHASE: 施工图 Detail Design

M L H V D C - L C S - E C I - D D - H A - 0 2 1 2 - 0 0 2 A

	姓名 Name	日期 Date
设计 Designed	吴俊勇	
校核 Checked	王新林	
审核 Reviewed	郑坤	
批准 Approved	郑坤	

深井泵房通风平面图
Deep well Ventilation plan

专业 Speciality	会签 Sign	日期 Date
结构 Structure		
电气 Electrical		
暖通 HVAC		
给排水 H.V.A.C. and Drainage		

比例 Scale: 1:100 | 图号 DWG NO.: 30-B003701S-N0212-002 | 版本 REV.: A

594X841